AMEND	MARK	DATE	REVISION ITEM	REVISION REASON
	⚠	–	–	–

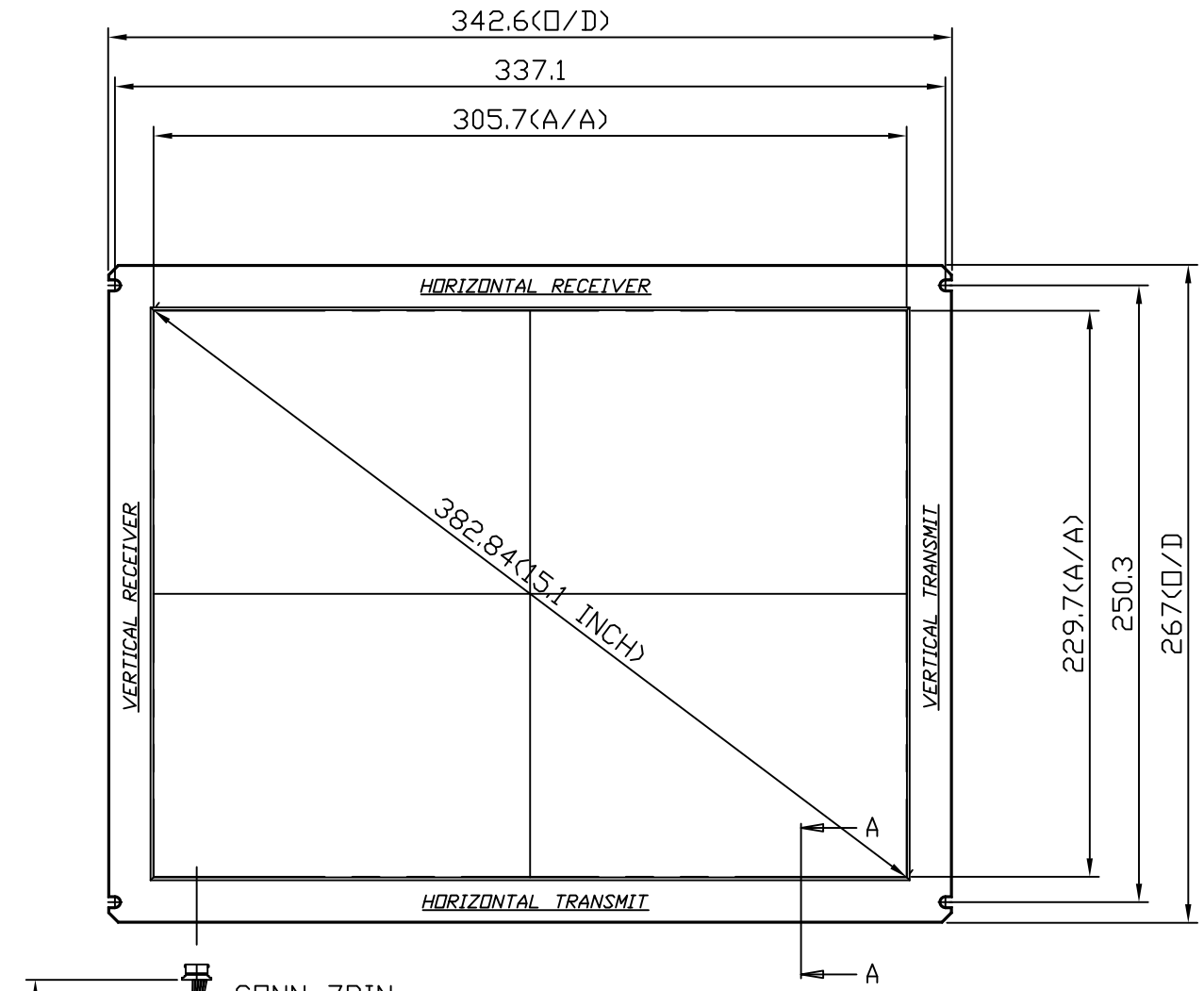

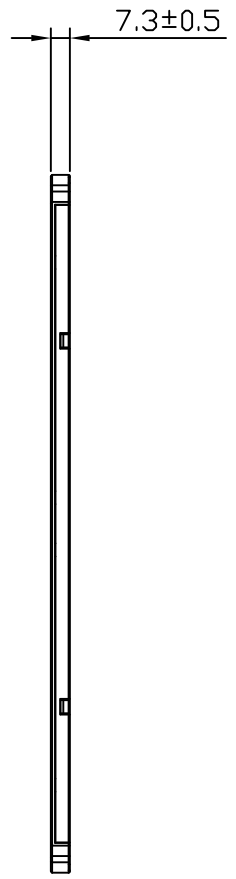

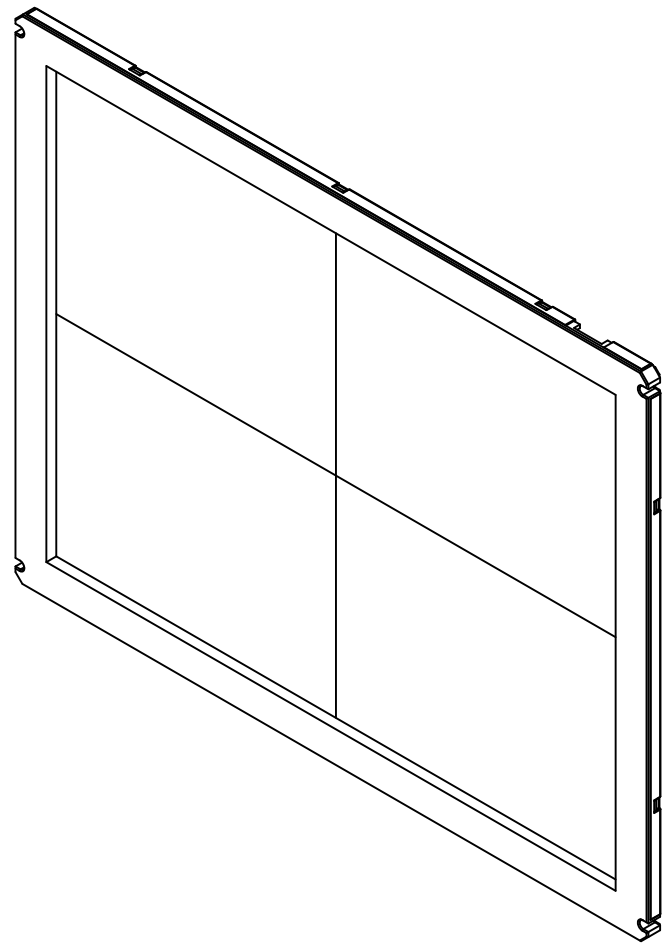

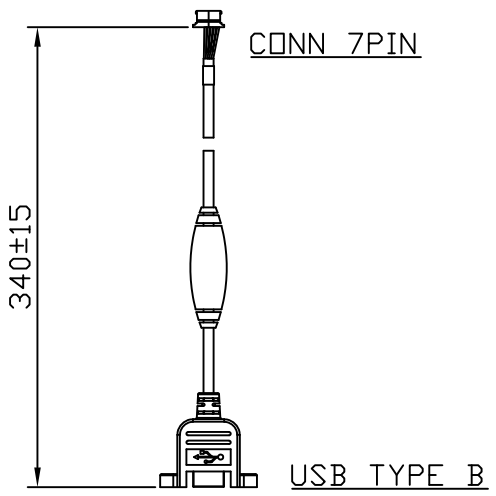

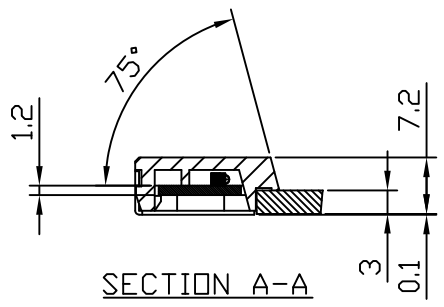

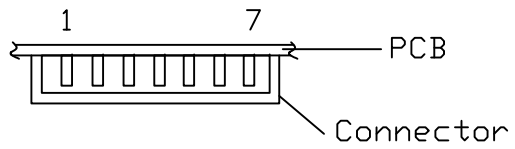

PIN1:NC
PIN2:NC
PIN3:GND
PIN4:GND
PIN5:D+
PIN6:D-
PIN7:VCC

NO	PART NO.	PART NAME	Q'TY	A(mm)	COLOR/FINISH
1	–	T150 TOUCH MODULE	1	–	BLACK

TOMERANCES (ANGLE: ±0.5°)

DIM(mm)	Class1	Class2	Class3
>2000	±1.00	±2.00	±4.00
>1000~≤2000	±0.50	±1.20	±3.00
>400~≤1000	±0.25	±0.80	±2.00
>120~≤400	±0.20	±0.50	±1.20
>30~≤120	±0.15	±0.30	±0.80
>7~≤30	±0.10	±0.10	±0.50
≤7	±0.05	±0.10	±0.30
HOLE	+0.05	+0.05	+0.05

THIRD ANGLE PROJECTION

T1 KOREA

T1 KOREA CO., LTD.

MODEL NO.	T150			
PART NO.	TYM015010U30-HY	SCALE	1/1	RMK'S
PART NAME	T150 T/MODULE	UNIT	mm	
MATERIAL	PC+STEEL	SIZE	A3	
YY/MM/DD	18/05/08	SHEET	1/1	
DWG NO.		REV. NO		
DWG NAME			CHK'D	
DRAWN			APP'D	

A3 (420 x 297)